D-105 Separator DRUM Control System

Done by: Alikhan Ualizhanov, Nathnael Biresaw, Aknur Saifolla

Project Goal:

The goal of this project is to design and implement an automated control system for Drum D-105 using Honeywell Experion PKS.

The system includes pressure and level control loops, device control for transfer equipment, and a simple Sequential Control Module (SCM) for safe startup, operation, and shutdown.

High Performance HMI principles (ISA-101) are applied for operator interaction and monitoring.

Process Description

Process Overview:

- Drum D-105 is used as a process unit for phase separation and buffering.
- Inlet flow enters the drum through upstream equipment.
- The drum pressure is controlled using a pressure control valve.
- Liquid level inside the drum is monitored and controlled.
- Product is transferred to downstream units.

Main Controlled Variables:

- Pressure inside the drum
- Liquid level inside the drum

Object of project: Level 1

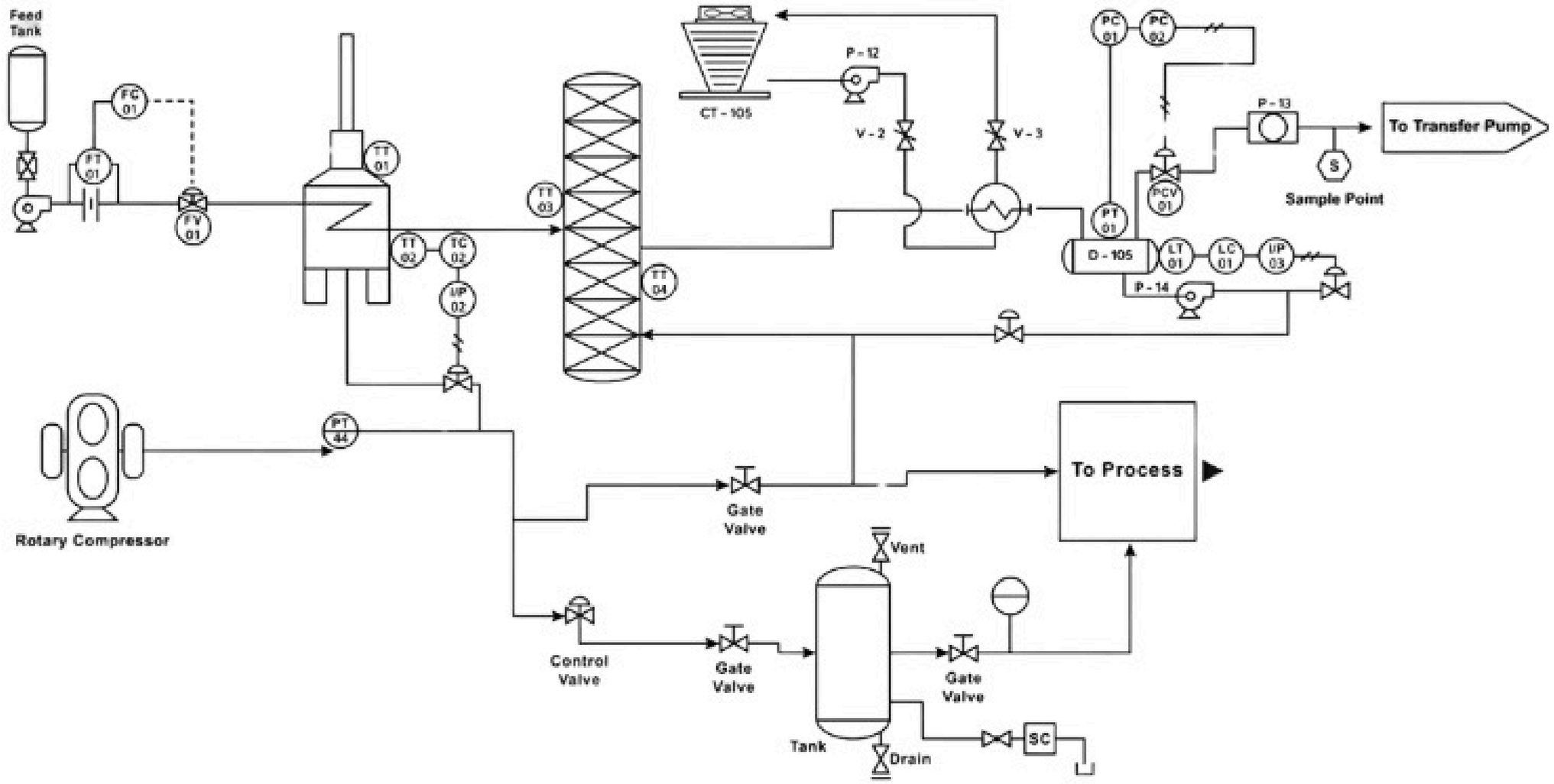

Object of project: Level 2

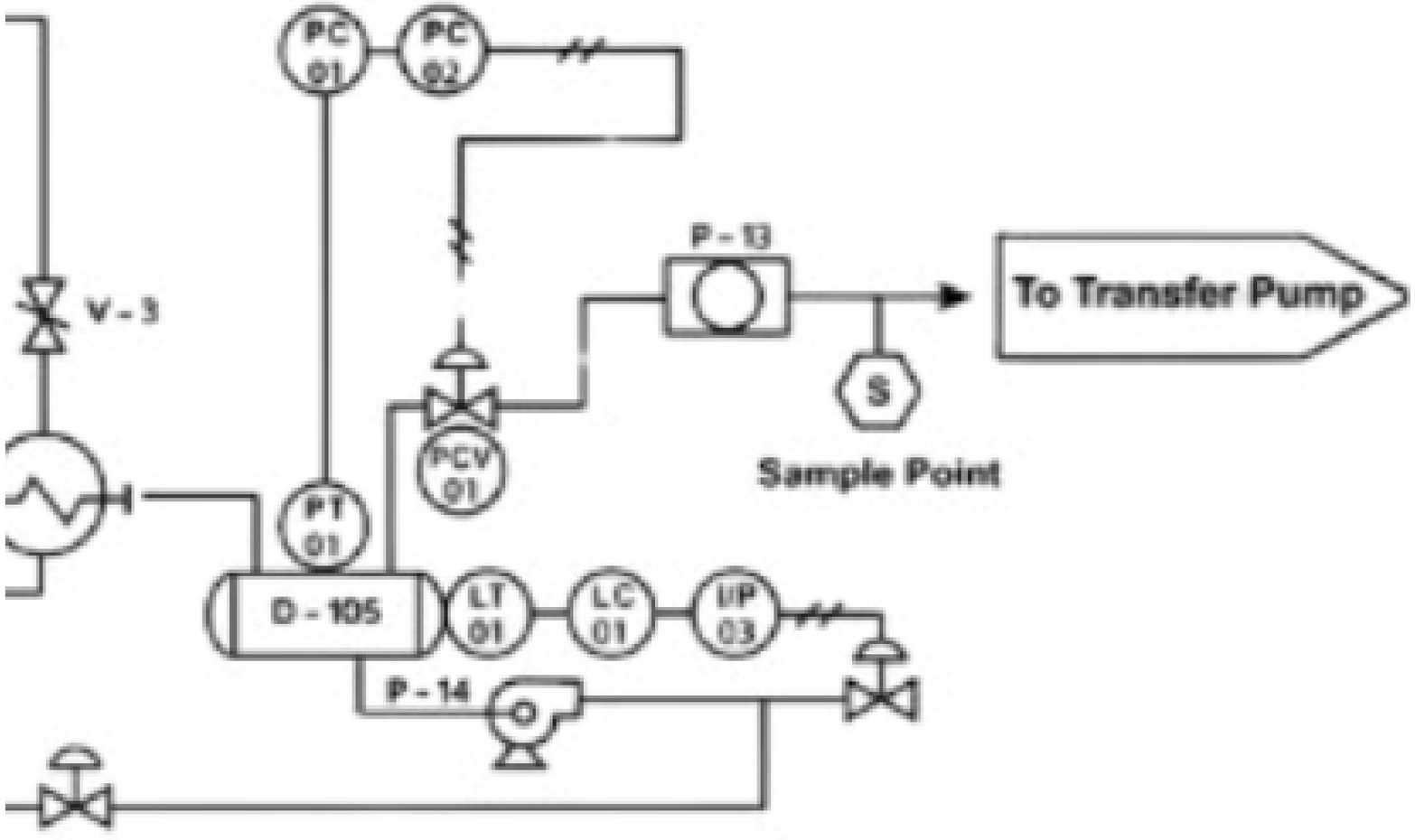

Control System Architecture:

- Controller: Honeywell C300
- Control Strategy:
- Pressure Control Loop (PIC)
- Level Control Loop (LIC)
- Control Modules used:
- Measurement blocks (AI)
- PID controllers
- Device control (Pump / Valve)
- Sequential Control Module (SCM)
- Operator Interface:
- HMIWeb Display Builder
- ISA-101 High Performance HMI

Table 1 LOOP NAME TABLE

LOOP NAME	Tages
01PIC	01PT
01PIC	01PCV
01PIC	01PDE
01PIC	01PA
01LIC	01LT
01LIC	01LCV
01LIC	01LDE
01LIC	01LA
01HC	01HS1
01HC	01HS2
01HC	01P
01FIC	01FT (02 PC)

Loop name Table 2

TAG	TYPE	LOOP NAME	CONTROL PROCESSOR	MARSHALLING CABINET	IO CARD	IO CARD TYPE	CHANNEL	P&ID	MULTICORE CABLE	DEVICE TYPE
01PT	AI	01PIC	C300 PCNT02	Marshalling 1	CC-PUIO31	UIO	1	2-300-2-001	AWG 16-30	Pressure Transmitter
01PCV	AO	01PIC	C300 PCNT02	Marshalling 1	CC-PUIO32	UIO	10	2-300-2-002	AWG 16-30	Pressure Control Valve
01PDE	AI	01PIC	C300 PCNT02	Marshalling 1			3	2-300-2-003	AWG 16-30	Differential Pressure Indicator
01PA	DO	01PIC	C300 PCNT02	Marshalling 1	CC-PUIO33	UIO	15	2-300-2-004	AWG 16-30	Pressure Alarm Lamp
01LT	AI	01LIC	C300 PCNT02	Marshalling 1	CC-PUIO34	UIO	2	2-300-2-005	AWG 16-30	Level transmitter
01LCV	AO	01LIC	C300 PCNT02	Marshalling 1	CC-PUIO35	UIO	20	2-300-2-006	AWG 16-30	Level Control Valve
01LDE	AI	01LIC	C300 PCNT02	Marshalling 1	CC-PUIO41	UIO	4	2-300-2-007	AWG 16-30	Differential Level Indicator
01LA	DO	01LIC	C300 PCNT02	Marshalling 1	CC-PUIO36	UIO	25	2-300-2-008	AWG 16-30	Level Alarm
01HS1	DI	01HC	C300 PCNT02	Marshalling 1	CC-PUIO37	UIO	30	2-300-2-009	AWG 16-30	Start Stop Pump Button
01HS2	DI	01HC	C300 PCNT02	Marshalling 1	CC-PUIO38	UIO	31	2-300-2-010	AWG 16-30	Emergency Stop
01P	DO	01HC	C300 PCNT02	Marshalling 1	CC-PUIO39	UIO	11	2-300-2-012	AWG 16-30	Pump On/Off
01FT (02 PC)	AI	01FIC	C300 PCNT02	Marshalling 1	CC-PUIO40	UIO	6	2-300-2-011	AWG 16-30	Cascade Flow Control (Sensor)

Pressure Control Loop

Pressure Control Loop (PIC):

- Pressure is measured using a pressure transmitter.
- The pressure signal is processed by a PID controller.
- The controller output regulates a control valve on the outlet line.
- The loop maintains stable pressure inside Drum D-105.

Purpose:

- Prevent overpressure
- Ensure safe and stable operation

Level Control Loop

Level Control Loop (LIC):

- Level inside the drum is measured by a level transmitter.
- The level controller maintains liquid inventory.
- When level is high, liquid is transferred downstream.
- When level is low, transfer is limited to protect equipment.

Purpose:

- Prevent overflow
- Prevent dry running of downstream equipment

Creating High performance HMI

The HMI display illustrates a Level-2 unit operation screen for D-105

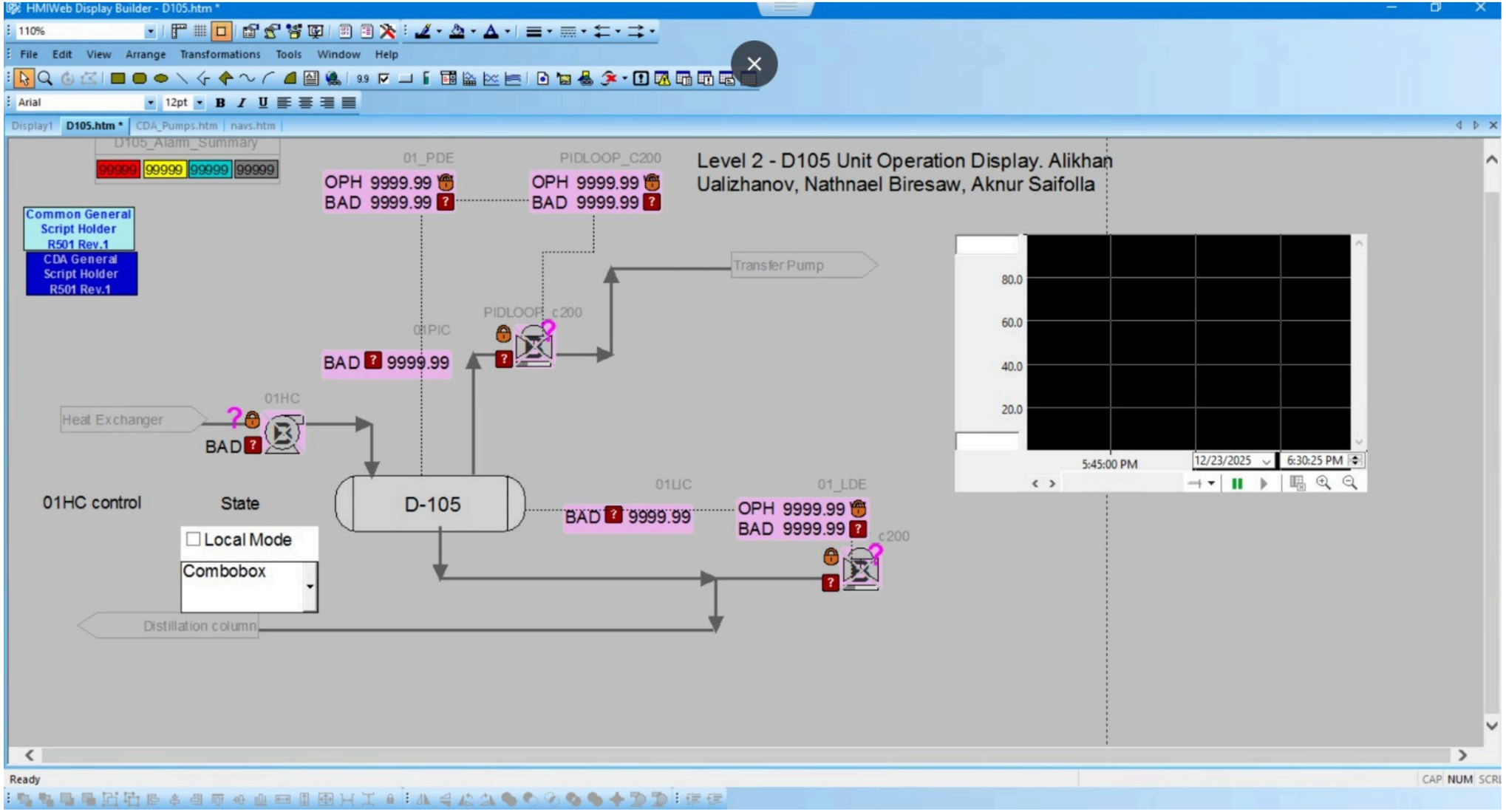

Block in Control Builder

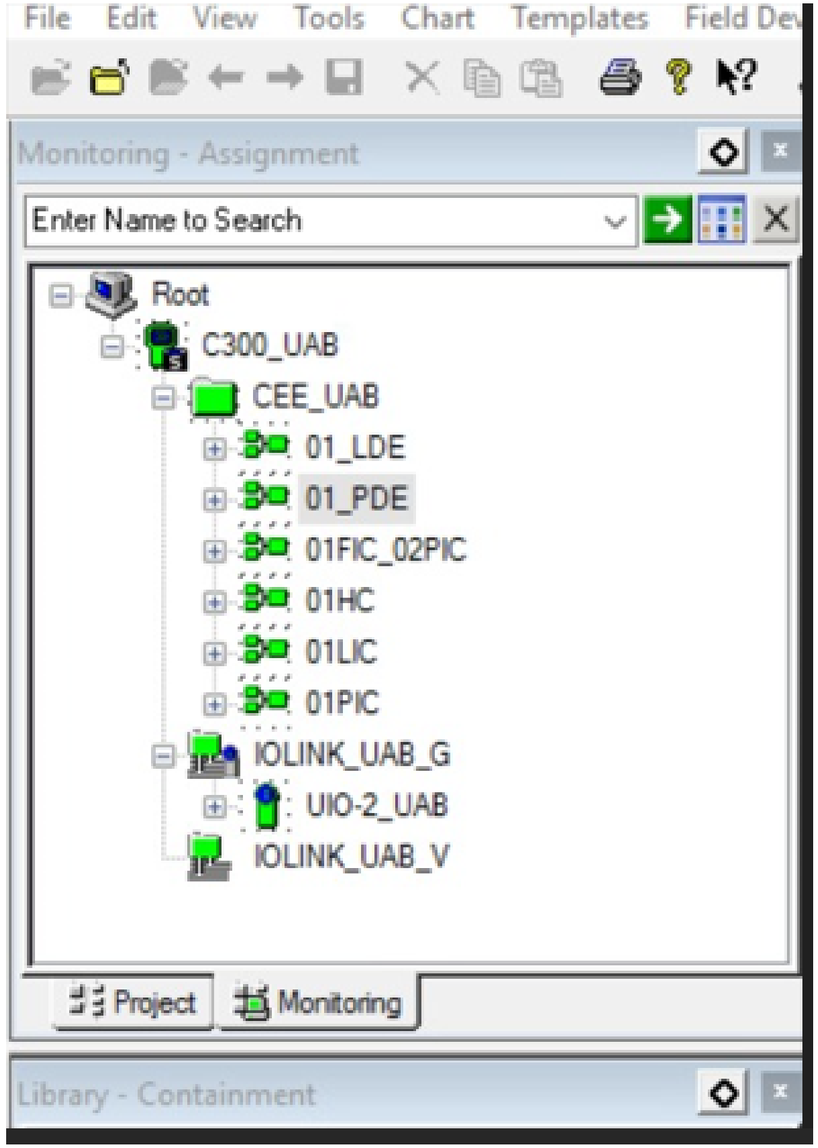

Cascade Control Implementation

In this project, a cascade control strategy is implemented to improve control performance and process stability.

The cascade structure consists of:

- A Master controller (Pressure Controller – PIC)
- A Slave controller (Flow Controller – FIC)

The master controller generates the setpoint for the slave controller.

MASTER CONTROLLER for DRUM

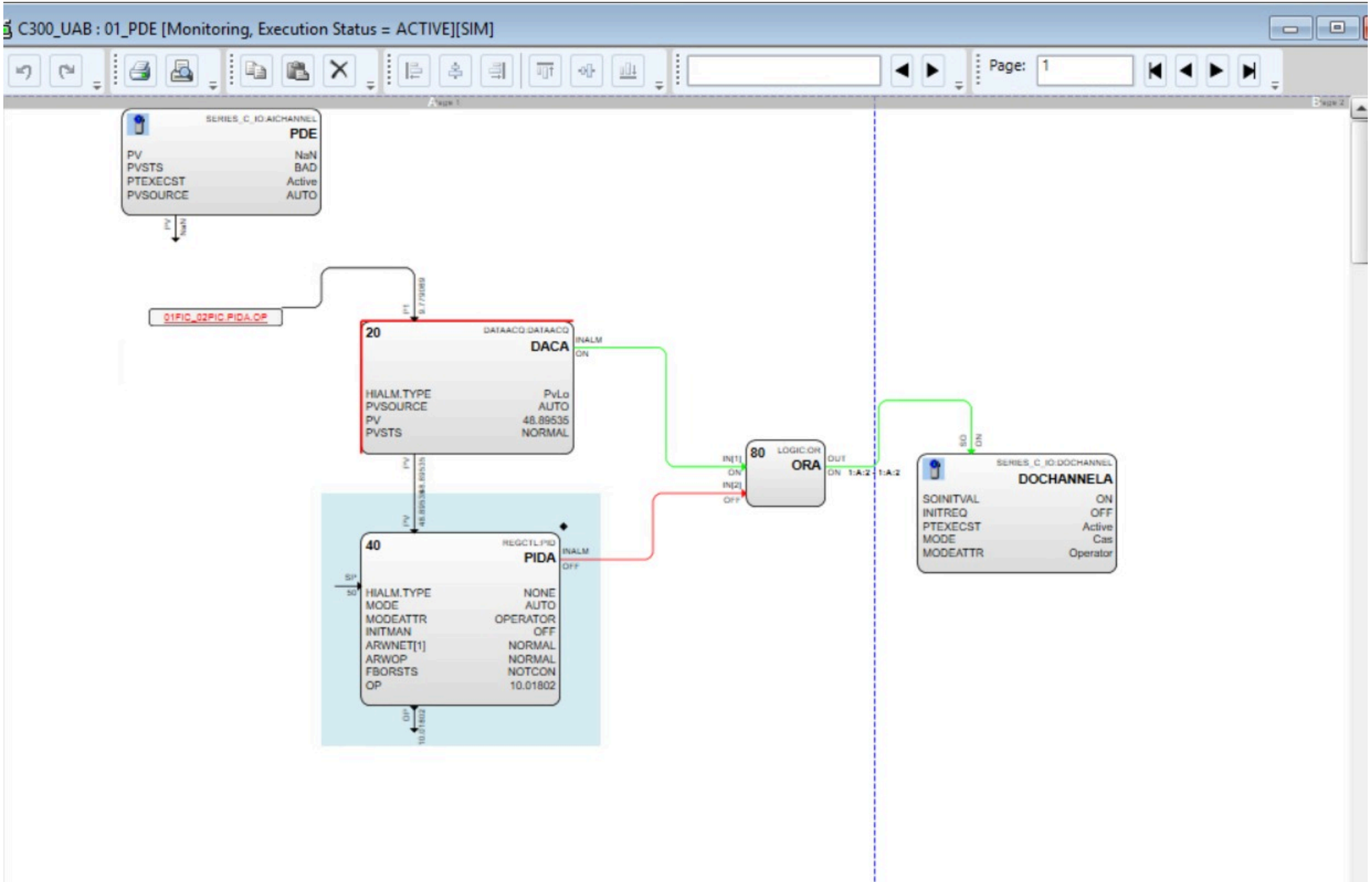

Slave controller or Second controller

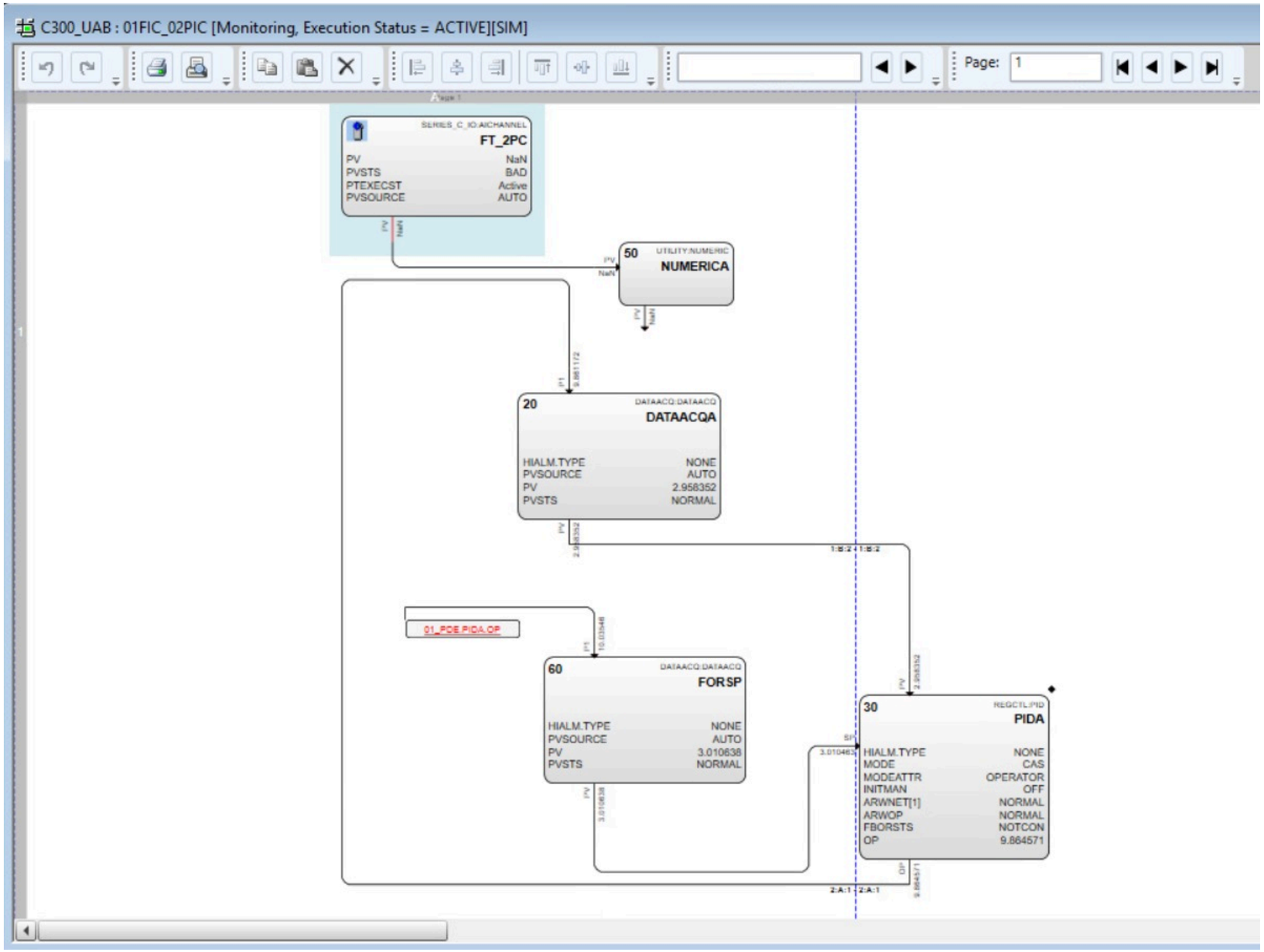

HAND Control for PUMP

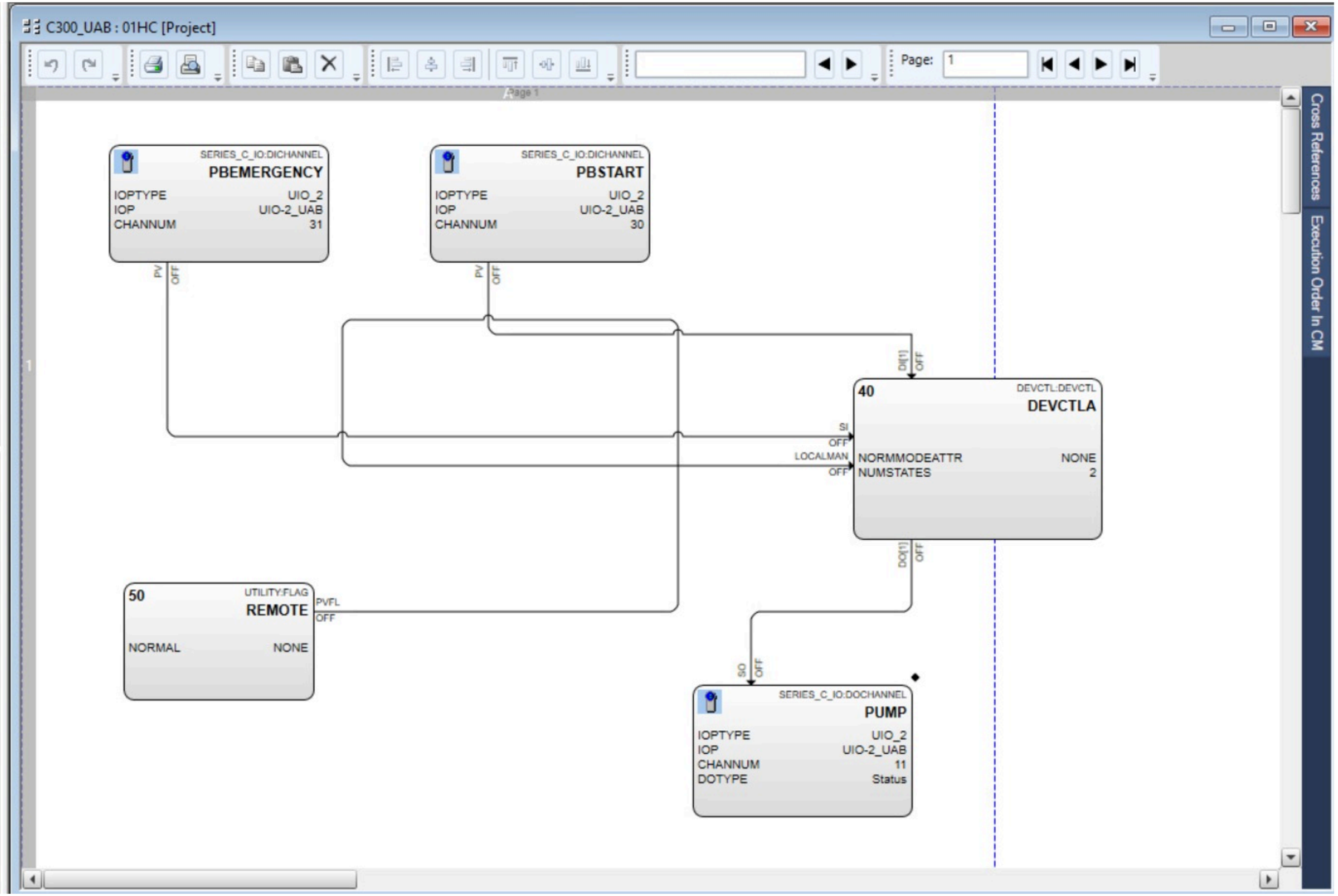

DIFFERENTIAL Level Control Measurment

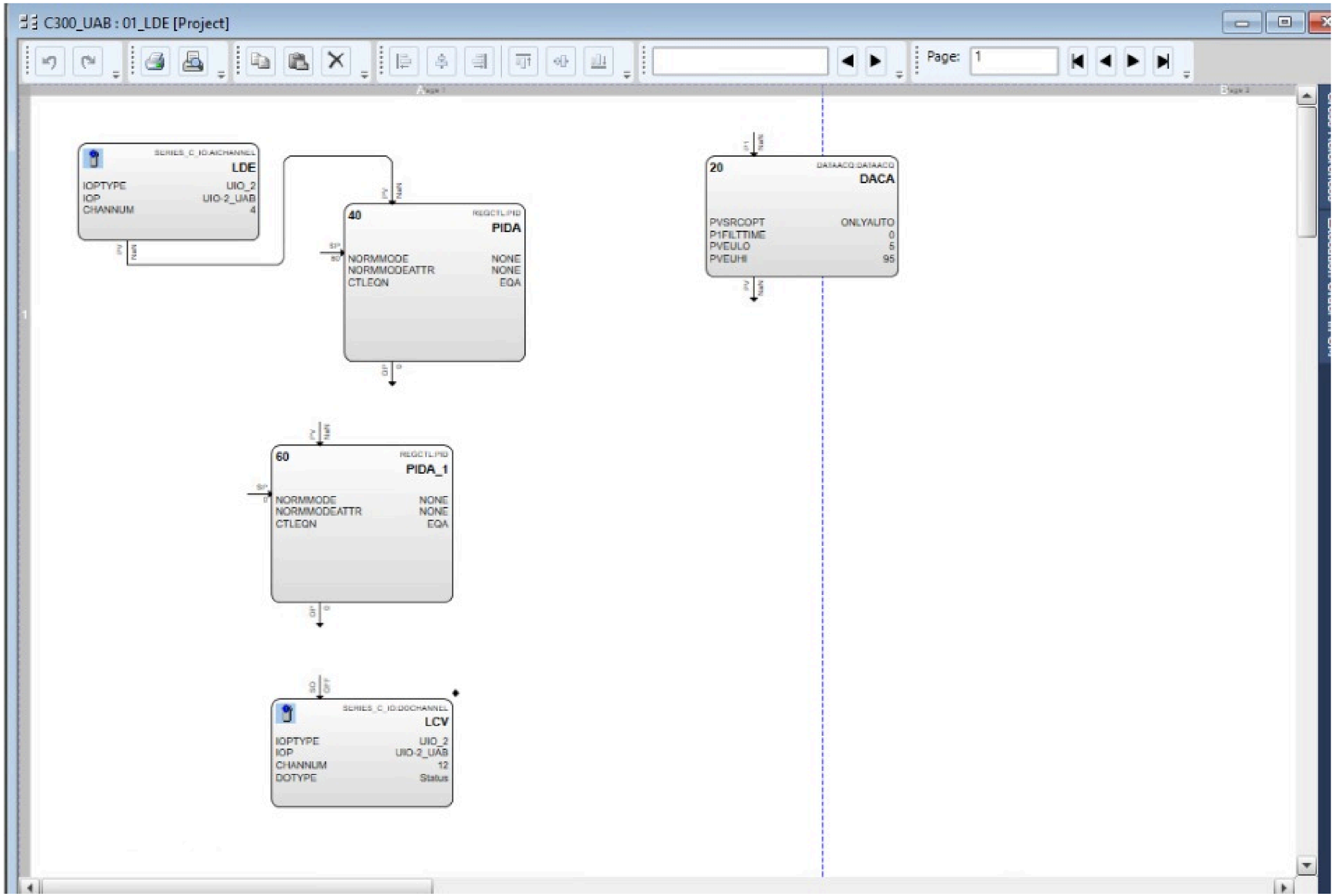

LEVEL TRANSMITTER CM

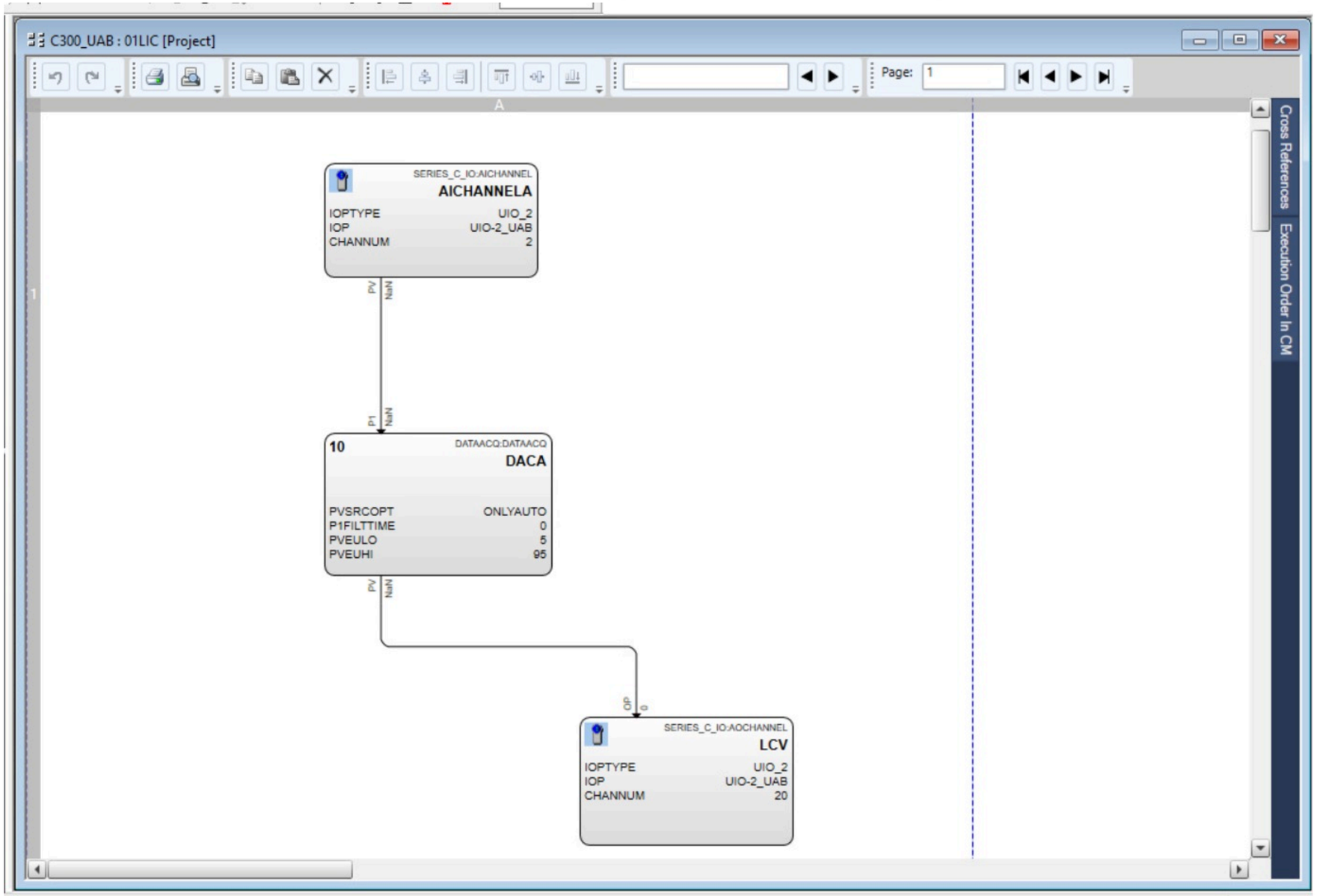

PRESSURE TRANSMITTER CM

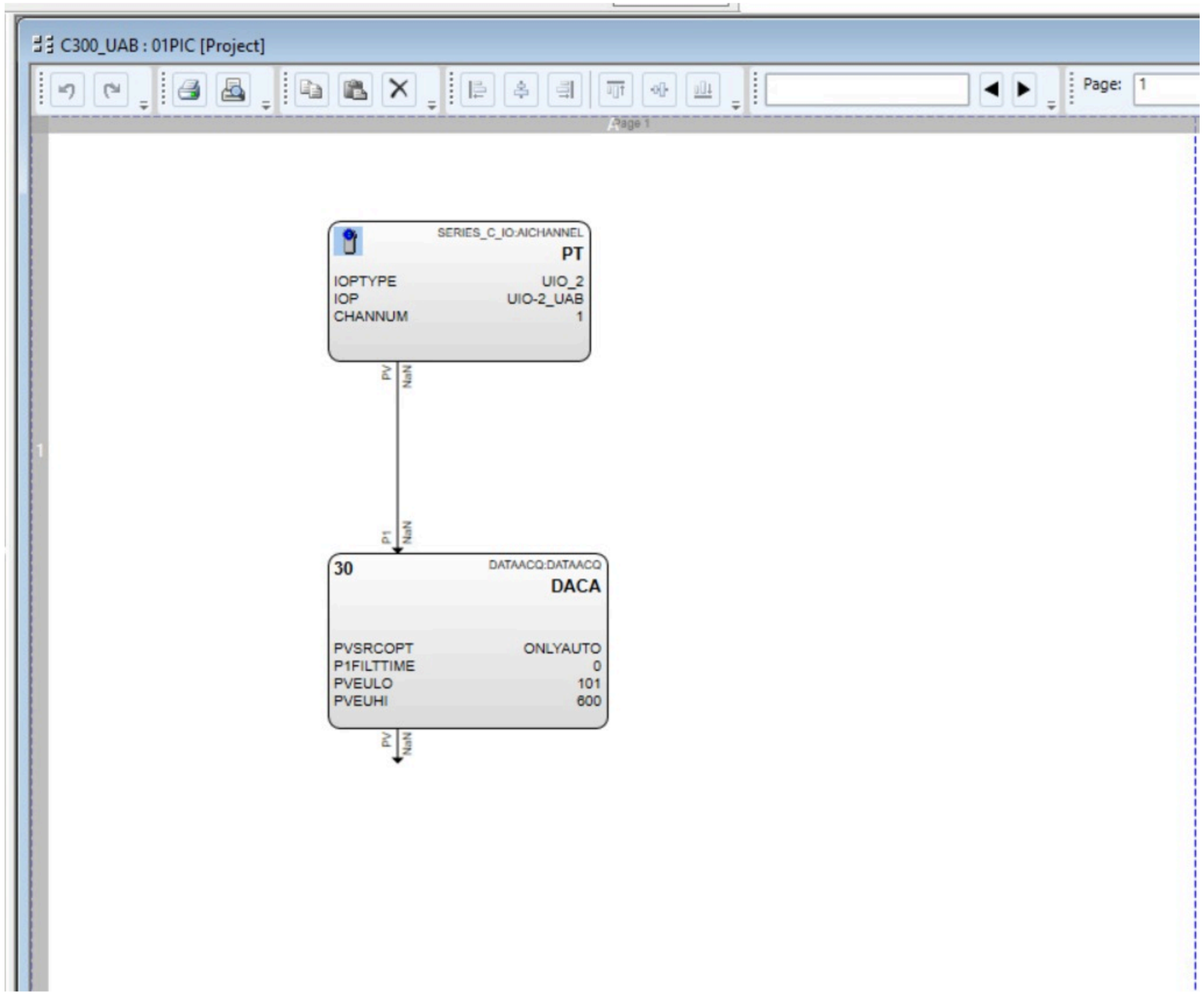

SIMULATION in STATION

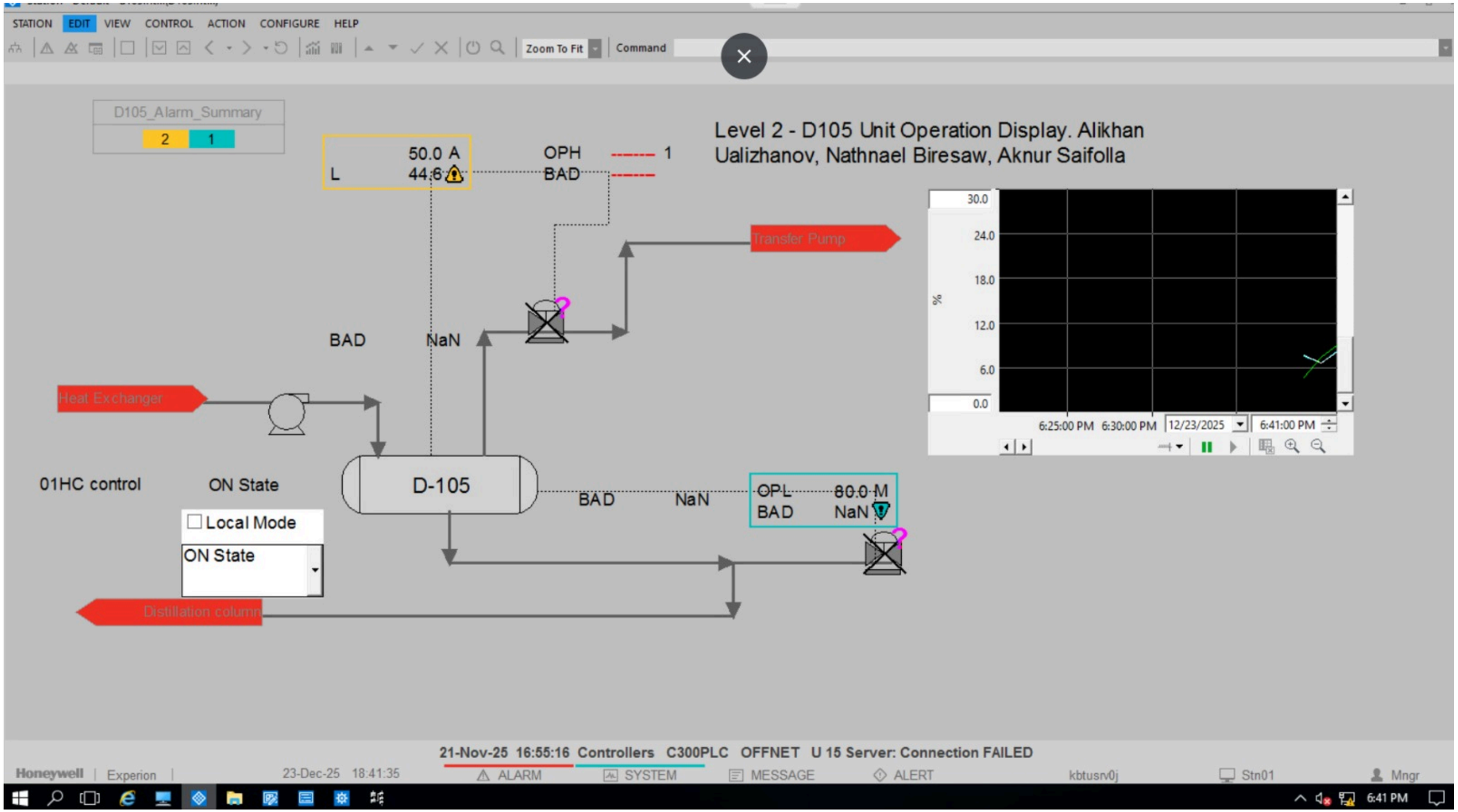

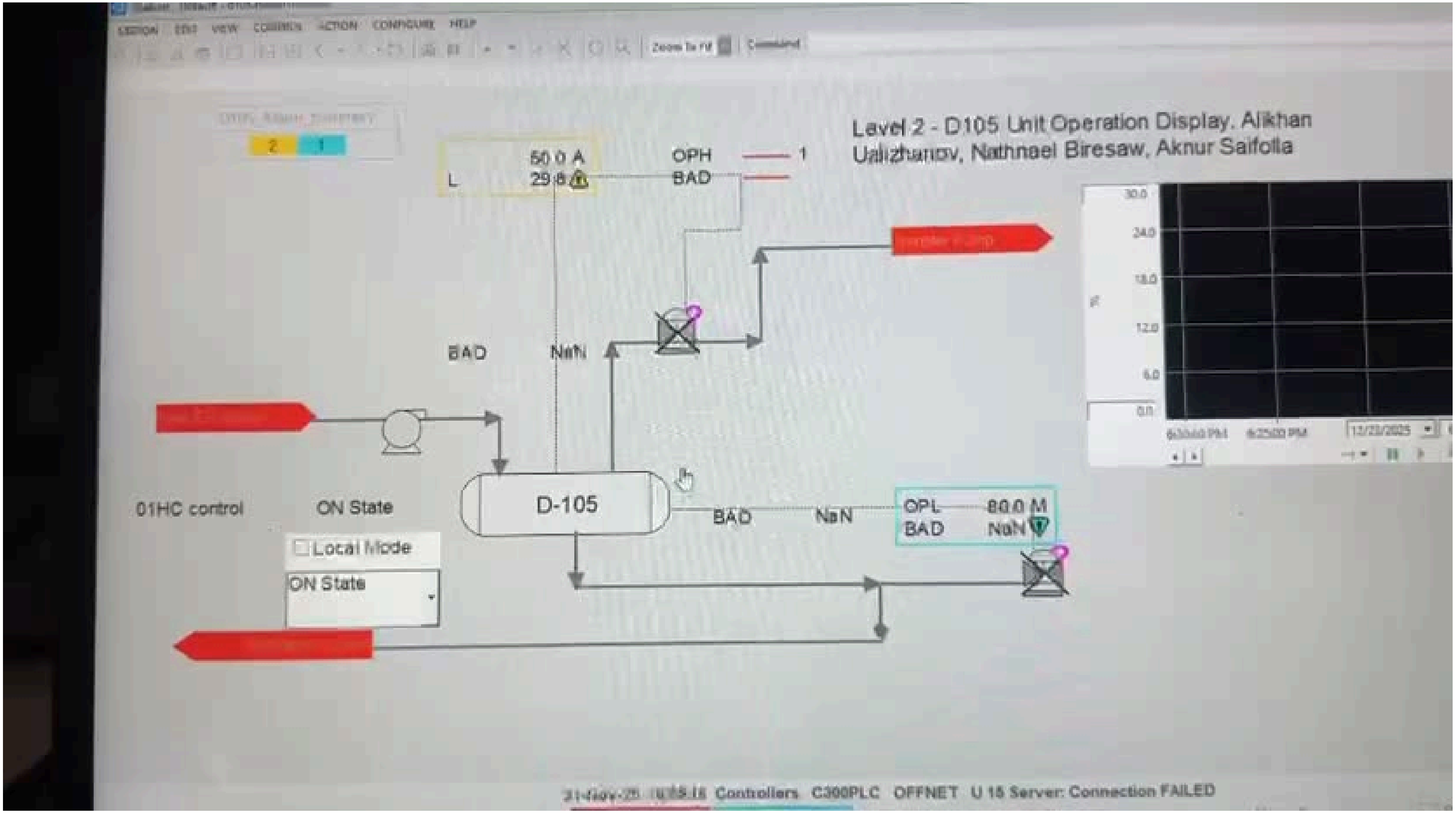
Level 2 - D105 Unit Operation Display. Alikhan Ualizhanov, Nathnael Biresaw, Aknur Saifolla
50.0 A
29.8
L
OPH
BAD
1
BAD
NaN
D-105
BAD
NaN
OPL
BAD
80.0 M
NaN
01HC control
ON State
Local Mode
ON State
Controllers
C300PLC
OFFNET
U 15 Server: Connection FAILED

Alarm Description:

- The alarm displayed on the screen indicates an abnormal process condition in Drum D-105.
- When the process variable exceeds its defined safety limits, the alarm is activated to warn the operator.
- Critical alarms are connected to the SCM logic and can initiate a trip to protect equipment and ensure safe operation.

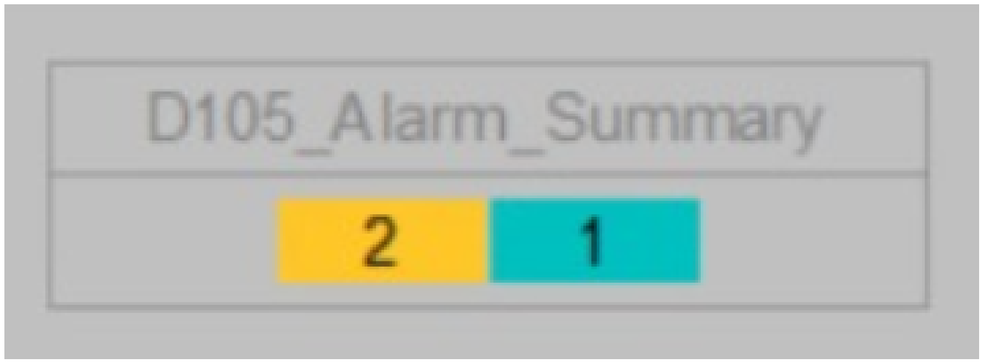

Trend Description:

The trend display shows real-time and historical values of key process variables such as pressure, level, and controller output.

Trends allow the operator to observe process behavior over time, evaluate controller performance, and detect abnormal situations before alarms occur.

Sequential Control Module (SCM)

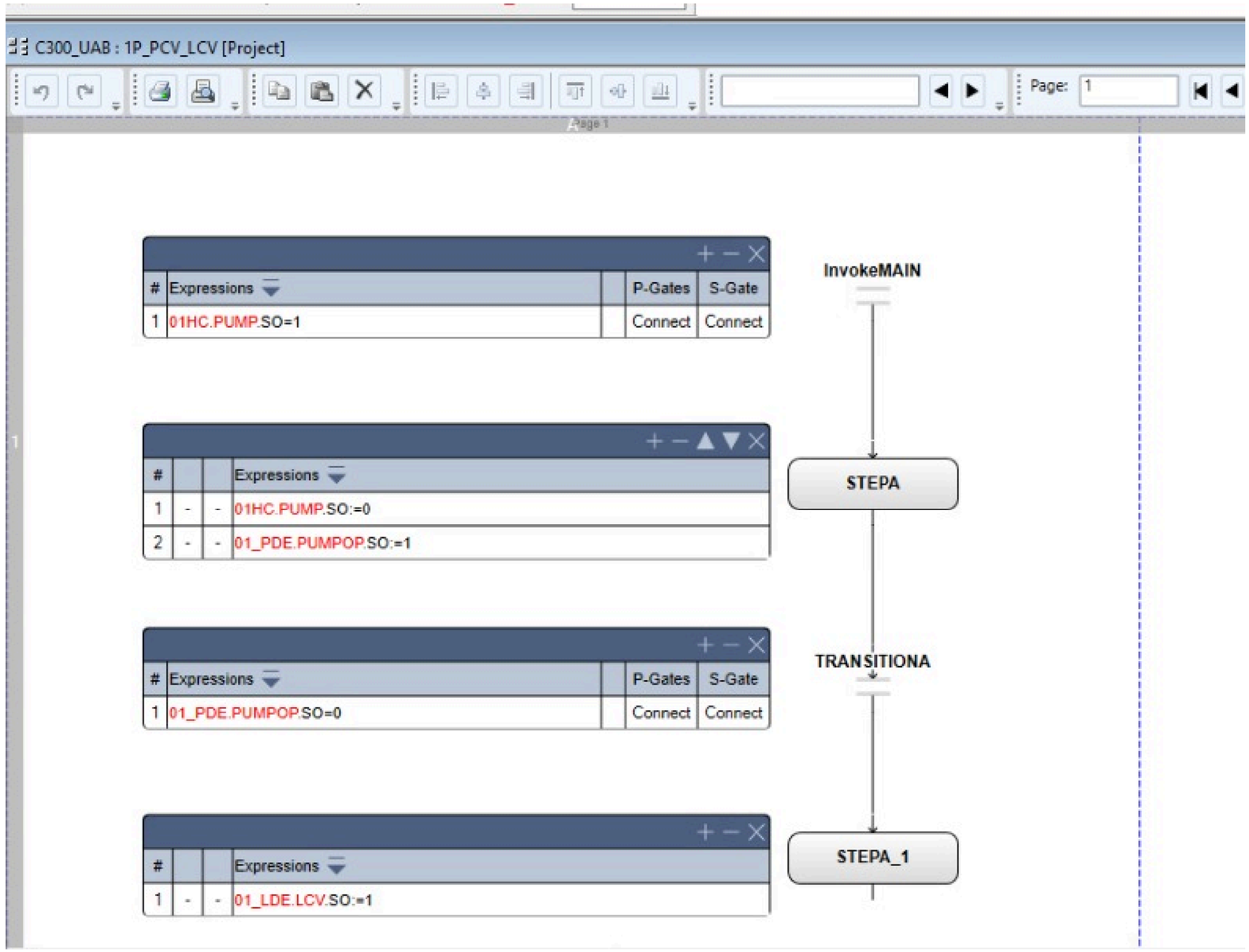

CONCLUSION

This project successfully demonstrates the implementation of an automated control system for Drum D-105 using Honeywell Experion PKS.

Pressure and level control loops, cascade control strategy, alarms, trends, and a simple SCM were configured to ensure safe and stable operation.

The project shows practical application of industrial automation principles, including PID control, sequential logic, and high performance HMI design.

Overall, the system improves process safety, reliability, and operator awareness.